**MICRO SWITCH**
FREEPORT, ILLINOIS, U.S.A.
A DIVISION OF HONEYWELL
FED. MFG. CODE 91929

# SWITCH - ENCLOSED

CATALOG LISTING
**6LS3**

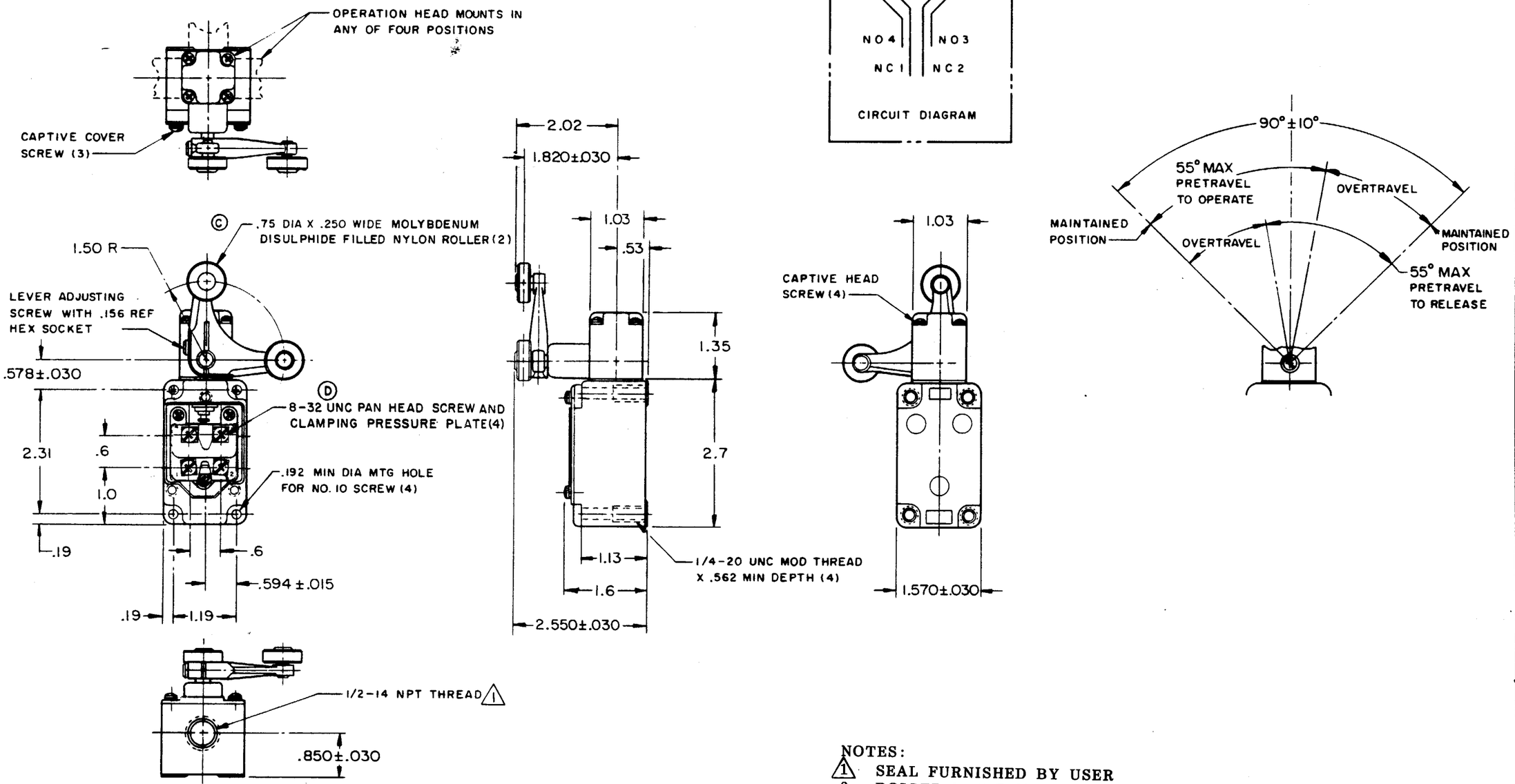


NOTES:
1. SEAL FURNISHED BY USER
2 - ROLLER LEVER MAY BE LOCKED IN ANY POSITION THRU 360°

THIS DRAWING COVERS A PROPRIETARY ITEM AND IS THE PROPERTY OF MICRO SWITCH, A DIVISION OF MINNEAPOLIS-HONEYWELL REGULATOR CO. THIS DRAWING IS NOT TO BE COPIED OR USED WITHOUT THE APPROVAL OF MICRO SWITCH.

| CHARACTERISTICS | ELECTRICAL DATA | SCALE 1/2 TO 1 |
|---|---|---|
| OPERATING TORQUE ---- 3 IN-LB MAX | CONTACT ARRANGEMENT (SEE CIRCUIT DIAGRAM) | DO NOT SCALE PRINT |
| SWITCH - BASIC REPLACEMENT ---- 2MN1 | 10A-120, 240, OR 480 VAC, 1/3 HP - 120 VAC<br>3/4 HP - 240 VAC; 0.8A - 115 VDC; 0.4A - 230 VDC<br>.1A - 550 VDC<br>PILOT DUTY: 600 VAC MAX | UNLESS OTHERWISE NOTED<br>DIMENSIONS ARE IN INCHES<br>TOLERANCES ARE:<br>ONE PLACE (.0) ±.030<br>TWO PLACE (.00) ±.015<br>THREE PLACE (.000) ±.005<br>ANGLES ±<br>WEIGHT |

| ISSUE | DRAWING NUMBER | RELEASE NO. | REPLACES |
|---|---|---|---|
| M | 6LS3 | MPS SR11843 | |

REVISIONS

| | | |
|---|---|---|
| A | CO18785 | RES 11 JUNE 64 |
| B | SR11843 | OMW 10 MAR 65 |
| C | CO20499 | MBF 23 AUG 65 |
| D | CO23403 | RER 26 SEP 68 |
| E | CO25152 | MBS 24 APR 69 |
| F | CO 50952-G | WJM 25 JUN 83 |
| G | CO 53005-D | CJH 1 AUG 84 |
| H | CO57786-B | CJH 14 FEB 86 |
| J | CO 65814-E | GRT 26 NOV 90 |
| K | CO-77031 | JDB 22 DEC 93 |

DRAWN RES 11 JUNE 64 — CHECK DAW 19 JUNE 64

FO-50378-003